Air Pumps

- High strength reinforced aluminum alloy reservoir is lightweight and corrosion resistant
- Pressure relief valve for overload protection
- Suggested air pressure range: 90 – 175 psi / 6 – 12 bar
- Designed to be used with single acting cylinders
- Dust cover protection for the release control valve
- Dual stage release control valve
- PA2000 offers a turbo function that features high flow at high pressure condition
- PA1500M and PA3801M offer a 4-way control valve for operation of double acting cylinders
- Maximum working pressure: 10,000 psi / 700 bar

Cylinder Accessories

PA600

PA1500L

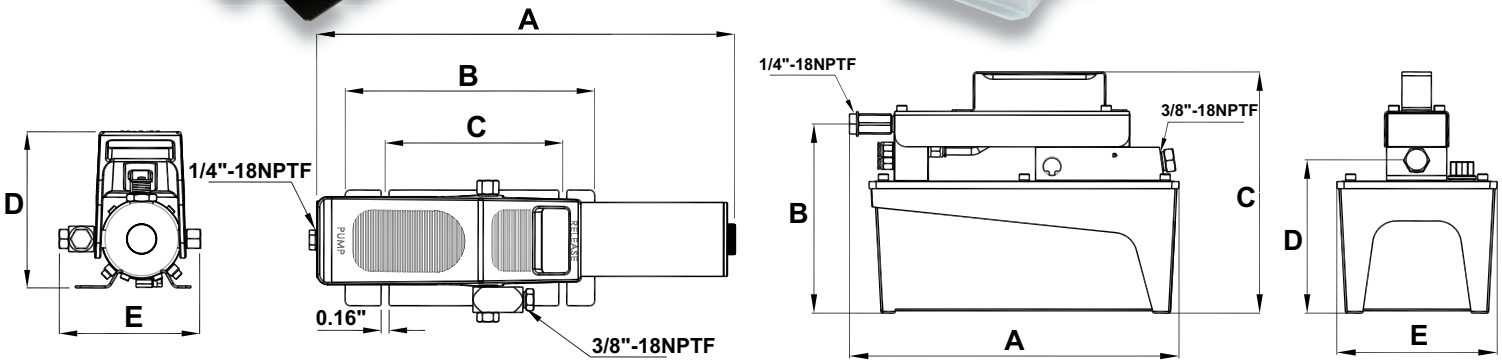

Used with Cylinder	Usable Oil Cap.	Model Number	Pressure Rating	Oil Output Flow Rate (in³/min)		Input Air Pressure Range	Dimensions (in)					Weight
							A	B	C	D	E	
	(in³)		(psi)	No Load	Load	(psi)						(lbs)
Single Acting	36.6	PA600	10,000	61	9	90-175	16.54	9.84	7.01	6.18	5.59	14.1
	91.5	PA1500		66	11		10.35	5.00	7.28	5.16	5.35	18.1
	122.1	PA2000		65	12		11.57	6.02	7.91	6.18	5.98	20.1
	231.9	PA3801		65	11		12.64	5.08	7.36	5.24	7.36	27.1
	91.5	PA1500L		61	10		10.98	6.30	8.03	5.12	5.35	19.4
	231.9	PA3801L		61	10		12.64	6.42	8.15	5.20	7.36	30.4
Double Acting	91.5	PA1500M	10,000	66	11	90-175	10.35	5.00	7.99	5.35	5.35	22.1

• Air hydraulic pump is compatible with a wide variety of industrial applications

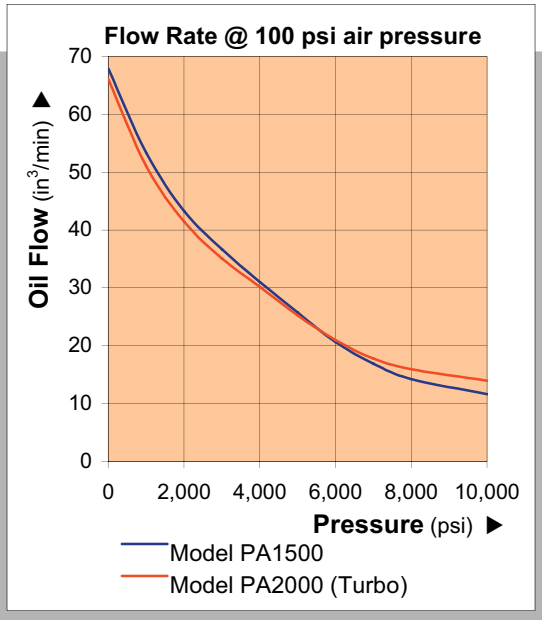

PA1500

PA3801

PA1500M

• Drawing for PA1500 and PA3801

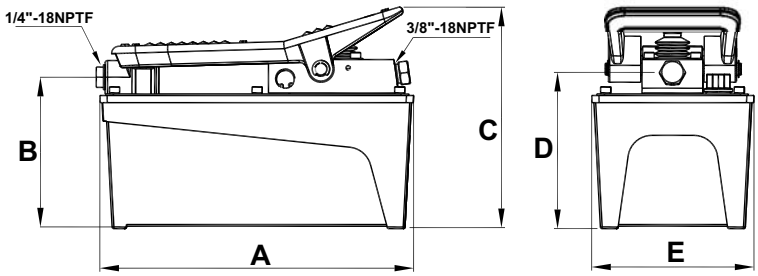

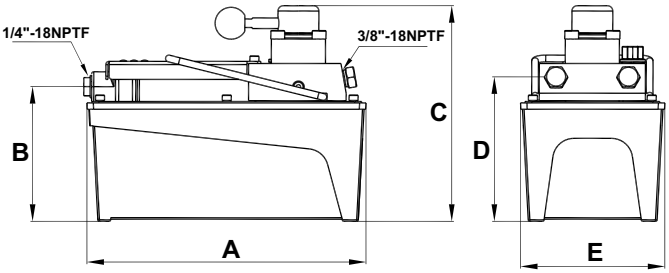
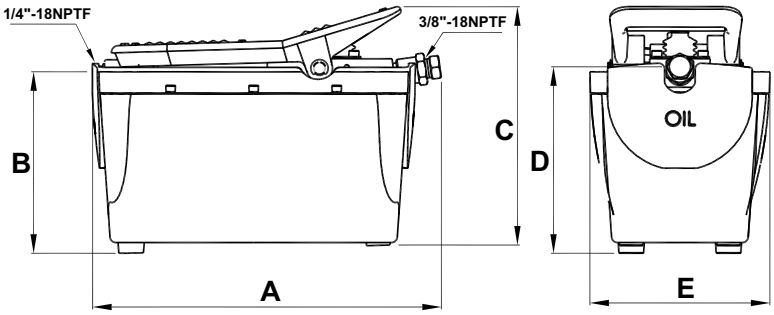
PA2000