HEIN-WERNER AUTOMOTIVE®

Shop Presses

Operating Instructions & Parts Manual

Model Number	Capacity
HW93400 thru HW93405	55 Ton
HW93610, HW93615	100 Ton

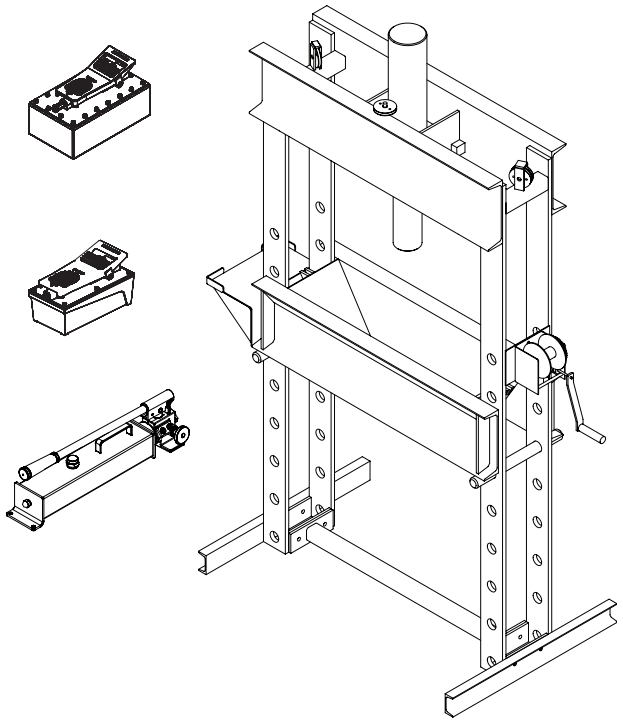

Models HW93400, HW93401, HW93402, HW93404, HW93405

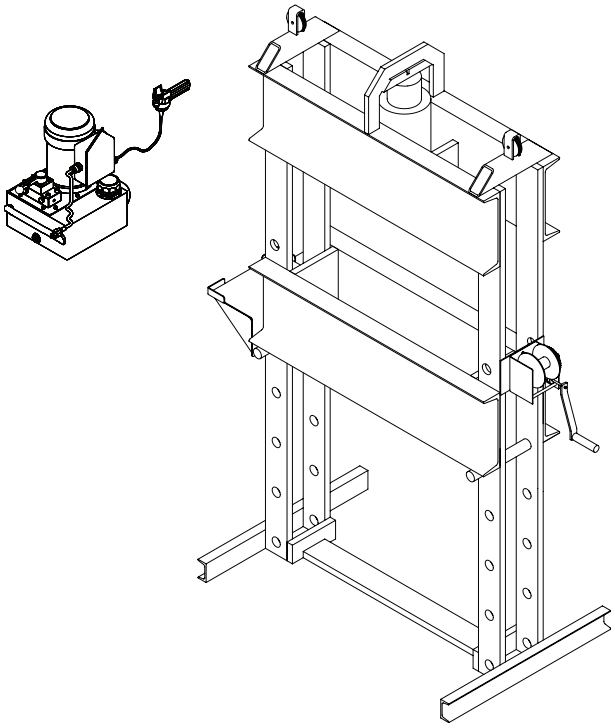

Models HW93610, HW93615

This is the safety alert symbol. It is used to alert you to potential personal injury hazards. Obey all safety messages that follow this symbol to avoid possible injury or death.

SFA Companies
10939 N. Pomona Ave. Kansas City, MO 64153
customerservices@heinwerner-automotive.com

Read this manual and follow all the Safety Rules and Operating Instructions before using this product

HW93400-M0_122012

⚠ WARNING

- *Study, understand, and follow all instructions before operating the device.*
- *Do not exceed rated capacity.*
- *Prior to use, make sure press is securely anchored.*
- *The press shall be installed and operated in accordance with federal (OSHA), state and local safety standards.*
- *Operators and observers shall wear eye protection that meets ANSI Z87.1 and OSHA standards.*
- *Keep hands, arms, feet and legs out of the work area. Accidental slippage can result in personal injury.*
- *Use appropriate guarding to contain any pieces that may break or fly apart when applying force.*
- *Use only press accessories having a capacity rating equal to or greater than the capacity of the press.*
- *Verify lift cables are slack before pressing on the bolster.*
- *Avoid off-center loads.*
- *No alterations shall be made to this product.*
- *Failure to heed and understand these instructions and markings may result in personal injury, property damage or both.*

SAFETY AND GENERAL INFORMATION

Save these instructions. For your safety, read, understand, and follow the information provided with and on this device before using. The owner and/or operator shall have an understanding of the device, its operating characteristics and safety operating instructions before operating the equipment. The owner and/or operator shall be aware that use and repair of this product may require special skills and knowledge. Instructions and safety information shall be read to and discussed with the operator in the operator's native language, making sure that the operator comprehends their contents, before use of this equipment is authorized. If any doubt exists as to the safe and proper use of this device, remove from service immediately.

Inspect before each use. Do not use if abnormal conditions such as cracked welds, damaged, loose or missing parts are noted. Any equipment that appears damaged in any way, is found to be worn, or operates abnormally shall be removed from service until repaired. If the equipment has been or is suspected to have been subjected to an abnormal load or shock, immediately discontinue use until inspected by a factory authorized repair facility (contact distributor or manufacturer for list of authorized repair facilities). It is recommended that an annual inspection be made by an authorized repair facility. Labels and Operator's Manuals are available from the manufacturer.

PRODUCT DESCRIPTION

Hein-Werner Shop Presses are designed for automotive, truck, implement, fleet, and industrial repair facilities where pressing, bending, straightening, forming, or holding is required. Each press includes a cylinder, a pump, and winch assembly which provides safe and fast way to raise and lower the bed frame, and a pressure gauge for monitoring the applied force. Typical applications include installation and removal of alternator and power steering pump bearings, axle bearings, transmission bearings, seals, driveshaft bearings and u-joints. It is not intended for use as an assembly table or as a fixture stand used to secure large, final assembly components. Refer to the BVA Cylinder and Pump manuals for more information.

⚠ ***WARNING**: To reduce the risk of personal injury and/or property damage, ensure that the rated working pressure of each pressurized attachment is equal to or greater than the rated working pressure developed by the hydraulic pump.*

NOTICE: *The power retract feature of the HW93405 and HW93615 shop presses is not intended to be used under load. Do not pull or raise a workpiece with the power retract feature.*

PREPARATION

1. Before using this product, read the operator's manual completely and familiarize yourself thoroughly with the product, its components and recognize the potential hazards associated with its use.
2. Inspect before each use. Do not use if bent, broken or cracked components are noted. Check for and tighten any loose components.
3. Verify that the product and the application are compatible, if in doubt call Hein-Werner Technical Service (816) 891-6390.

SPECIFICATIONS

Press Model	Rated Capacity	Cylinder Model	Pump Model/Type	Press Bed Depth (front to back)	Press Bed Width (side to side)	Press Size (H" x W" x L")	Min. Work Height (in.)	Max. Work Height (in.)
HW93400	55 Ton	H5506	P2001/manual	14-7/8"	35-1/2"	79-1/8 x 56 x 30	14	55-1/2
HW93401			PA2000/air-hydraulic					
HW93402			PE0501T/electric					
HW93403		H5513	PA3801/air-hydraulic					
HW93404			PE0501T/electric					
HW93405		HD5513	PEM0501T/electric					
HW93610	100 Ton	H10010	PE1002T/electric	16-1/4"	35-3/8"	89-1/2 x 63 x 30	11-1/4	52
HW93615		HD10010	PEM1002T/electric					

Cylinders

Cylinder Model	Rated Capacity (ton)	Stroke (in.)	Effective Area (in^3)	Oil Volume (in^3)	Outer Dia. (in.)	Ram Dia. (in.)	Saddle Dia. (in.)	Collar Thread (in.)	Collar Thread Length (in.)
H5506	55	6.22	10.99	68.34	5	3.15	2.76	5"-12	2.17
H5513		13.27		145.77					
HD5513		13.19		144.94	5	3.74			1.73
H10010	100	10.24	20.57	210.6	6.97	4.13		6-7/8"-12	1.73
HD10010		10.13		208.3		3.74	2.95		2.00

Manual Pumps (Hand pumps)

Hand Pump Model	Usable Oil Volume (in^3)	Pressure Rating (psi)		Oil Displacement (in^3)		Oil Outlet Port Thread	Weight (lbs)
		1st Stage	2nd Stage	1st Stage	2nd Stage		
P2001	122	200	10,000	0.81	0.14	3/8"-18 NPTF	24

Air Pumps

Air Pump Model	Usable Oil Volume (in^3)	Pressure Rating (psi)	Oil Output Flow Rate (in^3/min)		Input Air Pressure Range (psi)	Weight (lbs)
			No Load	Load		
PA1500	91.5	10,000	65	11	110-175	18
PA2000	122.1			12		20
PA3801	232			11		27

Electric Pumps

Electric Pump Model	Reservoir Capacity (gal)	Pressure Rating (psi)		Oil Output Flow Rate (in^3/min)		Valve Type	Motor Size (hp)	Current Draw (A)	Motor Voltage (V)	Weight (lbs)
		1st Stage	2nd Stage	1st Stage	2nd Stage					
PE0501T	11	350	10,000	293	18	3-way, 3-pos	0.5	9	115/125	60
PEM0501T						4-way, 3-pos				
PE1002T	2	700		397	37	3-way, 3-pos	1	12		71
PEM1002T						4-way, 3-pos				

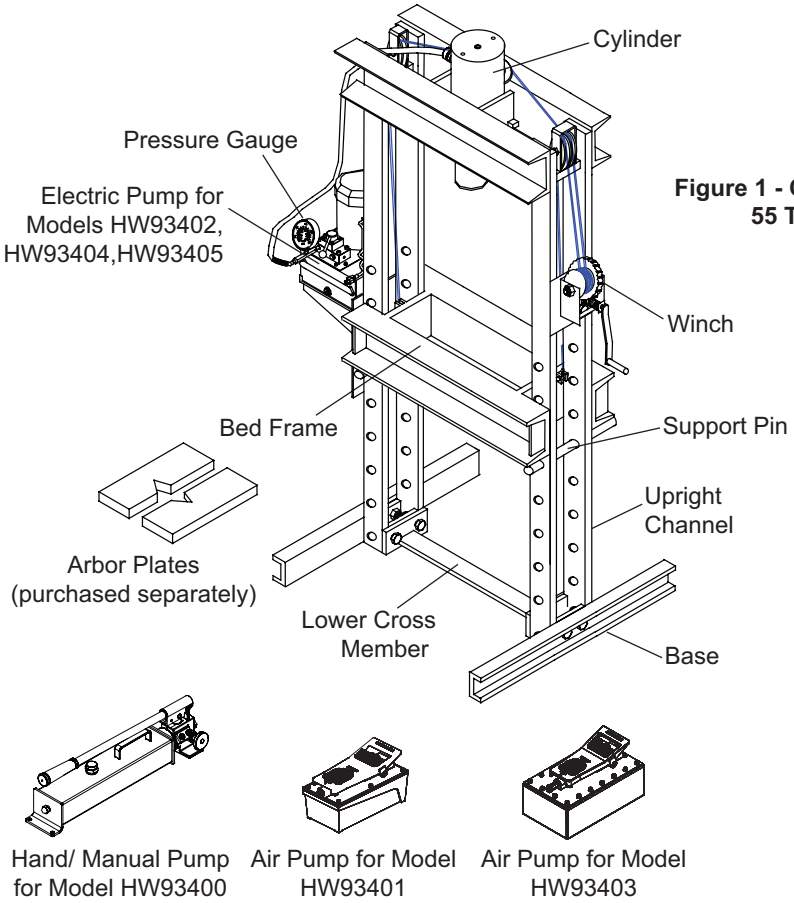

Figure 1 - Components for 55 Ton Press

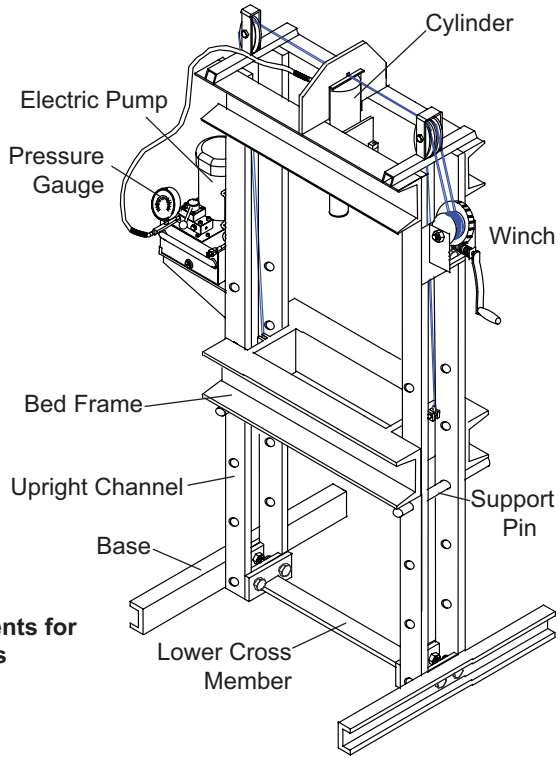

Figure 2 - Components for 100 Ton Press

ASSEMBLY

1. Adjust Bed Frame to lowest position and slacken Winch Cable.
2. Install Winch Assembly to press using (3) 3/8" bolts, washers and nuts.
3. Secure Cylinder to Cylinder Adapter Plate, and mount Adapter Plate to upper cross member using (4) 1/2" bolts and washers. Cylinder carrying handles may be removed by loosening Allen head screws.
4. Attach Base Frame Channels to Upright Channels with (4) 1/2" bolts and nuts.
5. Attach Lower Cross Member to Upright Channels with (4) 1/2" bolts and nuts.
6. Adjust the Pump Platform to desire height and secure with (4) 3/8" bolts, nuts & washers provided.
7. Connect the Pressure Gauge and the Hydraulic Hose to the Gauge Adapter, then connect the Gauge Adapter to Pump.

NOTICE: *Use thread tape or compound on all threaded hose connections.*

8. *For models HW93405 and HW93615:* Attach second hose to Port B on Control Valve. Attach second coupler to free hose end. Connect coupler to bottom port on Cylinder.
9. Place pump on pump bracket and connect other end of hydraulic hose to cylinder.

CAUTION: *Before disassembling, slide bed frame section down, into its lowest position.*

OPERATION

Refer to **BVA Owner's Manual** for cylinder and pump operation.

WARNING: *Shop press use can involve a projectile hazard. Ensure workpiece is centerloaded and secure. Reduce risk of flying debris by following all operating instructions. Know your press and hazards associated with its use. Keep hands and feet from bed area at all times.*

WARNING: *Risk of serious eye injury from projected debris. Reduce risk by wearing safety goggles when working with or around press.*

1. Insert support pins at desired height, then use winch to lower bed frame until cable is slack and bed frame is resting fully on support pins.
2. Place arbor plates on bed frame (purchased separately).
3. Secure workpiece to bed frame using every precaution necessary to ensure safety and prevent property damage.
4. Pump operation:
   a) *For HW93400 manual pump*: Close release valve by turning clockwise, pump handle to extend cylinder ram. To retract, open pump release valve.
   b) *For HW93401 and HW93403 air pump*: Connect to suitable air supply, press foot pedal to extend cylinder ram. To retract, activate release valve by pressing raised, stirrup shaped portion of foot pedal.
   c) *For HW93402, HW93404, HW93405, HW93610 and HW93615 electric pump*: Engage ON/OFF switch to start electric pump, then let pump idle for a few minutes before operating cylinder. Use control valve knob to extend or retract cylinder ram.

WARNING: *Burst hazard exists if hose or connection pressure exceeds rated pressure. Always monitor the pressure gauge while in operation and never leave loaded press unattended.*

NOTICE: *The power retract feature of the HW93405 and HW93615 shop presses is not intended to be used under load. Never pull or raise a workpiece with the power retract feature.*

NOTICE: *Never operate pump with hose disconnected from cylinder. If operated in this condition, the hydraulic hose and connections become pressurized, increasing burst hazard.*

5. Apply load to workpiece - **do not overload.**
6. Stabilize workpiece so that it will not inadvertently fall from bed frame once load is removed.
7. Once cylinder has fully retracted, remove workpiece.

NOTICE: *To protect your cylinder, cease pump operation after cylinder plunger is fully extended or retracted.*

MAINTENANCE

Reference cylinder and pump manuals for maintenance and adding/changing hydraulic oil instructions. For best results, change the oil once a year. Always use premium quality hydraulic oil.

Lubrication

A periodic coating of light lubricating oil to pivot points and hinges will prevent rust and assure assemblies move freely.

Storage

Depressurize the hydraulic system, disconnect hydraulic hose and lower the bed frame to lowest position. Disconnect both hoses on the HW93405 and HW93615 Double Acting Shop Presses.

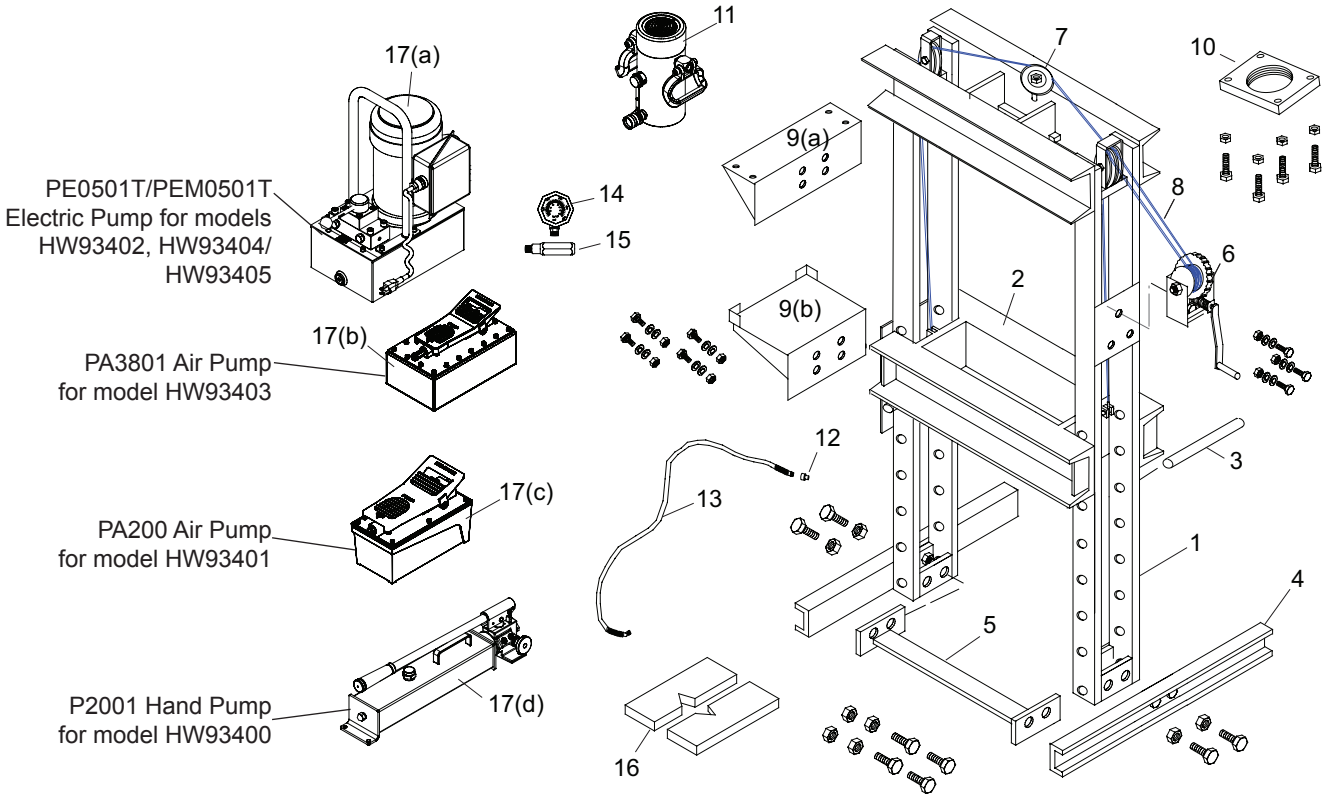

Figure 3: Replacement Parts Illustration for Model HW93400 thru HW93405

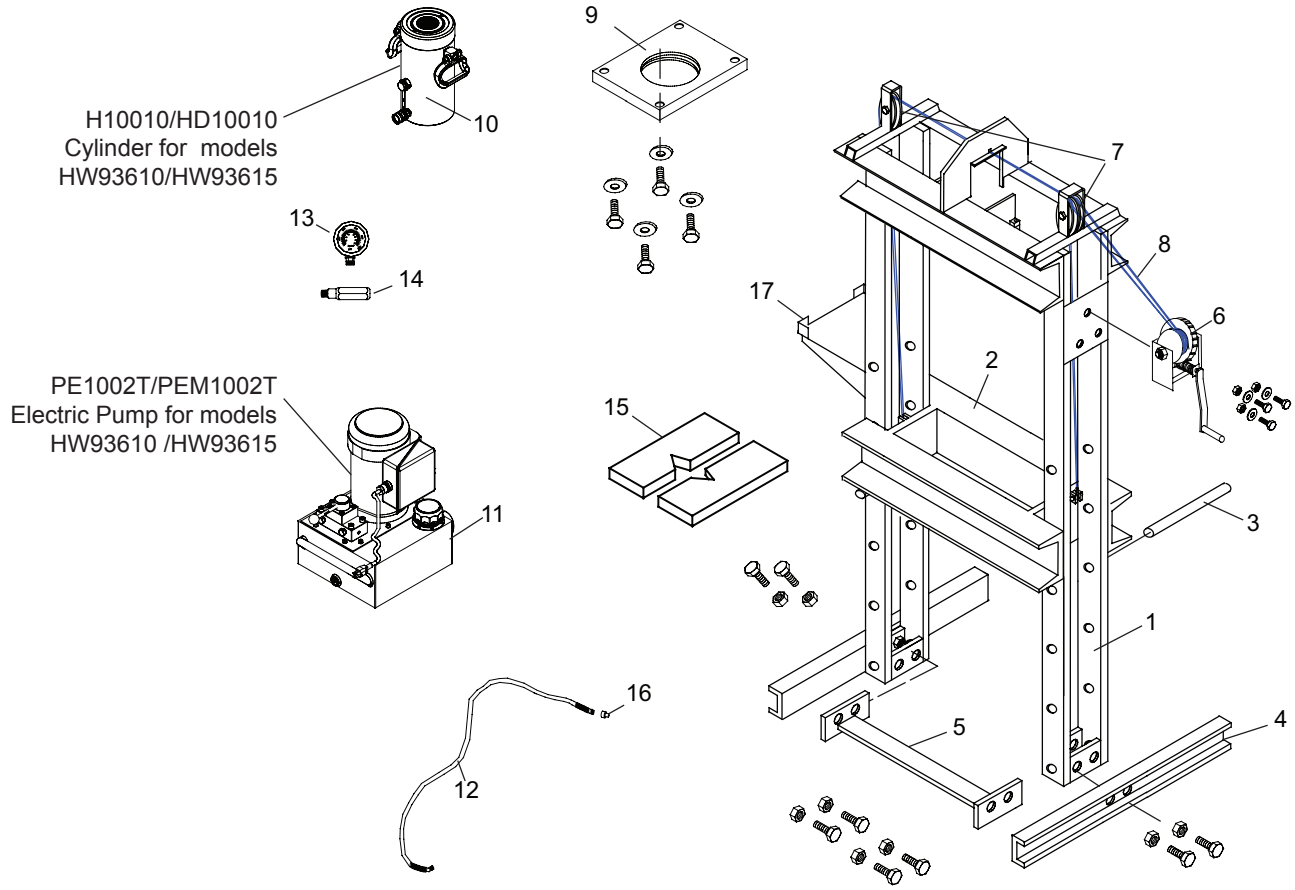

Figure 4: Replacement Parts Illustration for Model HW93610, HW93615

REPLACEMENT PARTS (ref. illustration on pg. 6)

Not all components of the press are replacement items, but are illustrated as covenient reference for position in the assembly sequence. When ordering parts, give model number, serial number and parts description. Call or write for current pricing: Hein-Werner Customer Support, 10939 N. Pomona Ave. Kansas City, MO 64153; Tel: (816) 891-6390; customerservices@heinwerner-automotive.com. For cylinder and pump service parts, please refer to BVA owner's manuals.

Replacement Parts for 55-ton Shop Press

Item	Part No. for Model:						Description	Qty
	HW93400	HW93401	HW93402	HW93403	HW93404	HW93405		
1	N/A						Shop Press Frame	1
2	N/A						Bed Frame	1
3	400-002-003						Bed Support Pin	2
4	400-002-004						Frame Base Channel	2
5	400-002-005						Lower Stabilizer	1
6	400-002-006						Winch	1
7	400-002-007						Cable Sheaves (Pulley)	4
8	400-002-008						Cable	2
9	400-002-009	400-002-011					Pump Platform	1
10	400-002-012						Cylinder Adapter Plate	1
11	H5506			H5513		HD5513	Cylinder, 55-ton	1
12	CH38M						Male Half Coupler, 3/8"	1*
13	CS3838	CS3838C	CS3838	CS3838C	CS3838	CS3838	Hydraulic Hose, 3/8"ID	1*
14	GW4014						Wet Pressure Gauge	1
15	CF3814						Gauge Adapter	1
16	AP55						Arbor Plates, 55 Ton	1
17	P2001(d)	PA2000(c)	PE0501T(a)	PA3801(b)	PE0501T(a)	PEM0501T	Pump	1
18	300-002-016	N/A	N/A	N/A	N/A	N/A	Pump Mounting Hardware Kit	1

Replacement Parts for 100-ton Shop Press

Item	Part No. for Model		Description	Qty
	HW93610	HW93615		
1	N/A		Shop Press Frame	1
2	N/A		Bed Frame	1
3	610-002-003		Bed Support Pin	2
4	610-002-004		Frame Base Channel	2
5	610-002-005		Lower Stabilizer	1
6	610-002-006		Winch	1
7	610-002-007		Cable Sheaves (Pulley)	3
8	610-002-008		Cable	2
9	610-002-009		Cylinder Adapter Plate	1
10	H10010	HD10010	Cylinder, 100-ton	1
11	PE1002T	PEM1002T	Pump, Electric	1
12	CS3838		Hydraulic Hose, 3/8"ID	1*
13	GW4014		Wet Pressure Gauge	1
14	CF3814		Gauge Adapter	1
15	AP100		Arbor Plates, 100 Ton	1
16	CH38M		Male Half Coupler, 3/8"	1*
17	400-002-011		Pump Platform	1

*Qty 2 for HW93405 and HW93615 Double Acting Presses

TROUBLESHOOTING

A system failure may or may not be the result of a pump malfunction. The following information is intended to be used as an aid in determining if a problem exist.

Symptom	Possible Causes	Corrective Action
Erratic Ram Performance	• Air in system or pump cavitation • External leak • Internal hydraulic leak	• Follow pump instructions for bleeding air • Tighten all connections • Contact authorized Service Center
Pump or ram fails to maintain pressure	• Overload condition • External leak • Internal hydraulic leak • Ram seals leaking • Pump or valve malfunctioning	• Remedy overload condition • Tighten all connections • Contact authorized Service Center • Contact authorized Service Center • Check pump operating instructions
Ram extends partially	• Hydraulic oil level too low in pump • Load is above the capacity of system • Ram is sticking or binding	• Fill and bleed the system • Match the capacity to application • Contact authorized Service Center
Slow ram movement	• Loose connection or coupler • Restricted hydraulic line or fitting • Pump not working correctly • Ram seals leaking	• Tighten connection or coupler • Clean and replace if damaged • Check pump operating instructions • Replace cylinder
Ram leaks hydraulic fluid	• Worn or damaged seals	• Contact authorized Service Center
Ram will not retract or retracts slower than normal	• Linkage binding • Loose couplers • Malfunctioning coupler • Weak or broken retraction springs • Ram damaged internally • Pump reservoir too full	• Lubricate all moving parts • Tighten couplers • Depressurize pump and hose, remove application, then replace a new coupler • Contact authorized Service Center • Contact authorized Service Center • Drain hydraulic fluid to correct level
Motor will not start (Models HW93402, HW93404, HW93610 & HW93615)	• No power or wrong voltage • Damaged power cord • Tripped circuit breaker • Loose or faulty wiring	• Check the power supply & voltage • Contact Customer Service • Make sure breaker is of adequate size • Contact Customer Service
Motor cuts out (Models HW93402, HW93404, HW93610 & HW93615)	• Extension cord too long • Faulty motor • Overheated motor can trip circuit breaker	• Replace with shorter cord • Replace or repair • Allow motor to cool, reset circuit breaker

TWO YEAR LIMITED WARRANTY

For a period of two (2) years from date of purchase, SFA Companies will repair or replace, at its option, without charge, any of its products which fails due to a defect in material or workmanship under normal usage. This limited warranty is a consumer's exclusive remedy.

Performance of any obligation under this warranty may be obtained by returning the warranted product, freight prepaid, to SFA Companies Warranty Service Department, 10939 N. Pomona Ave., Kansas City, MO 64153.
Except where such limitations and exclusions are specifically prohibited by applicable law:

1) THE CONSUMER'S SOLE AND EXCLUSIVE REMEDY SHALL BE THE REPAIR OR REPLACEMENT OF DEFECTIVE PRODUCTS AS DESCRIBED ABOVE.
2) SFA COMPANIES SHALL NOT BE LIABLE FOR ANY CONSEQUENTIAL OR INCIDENTAL DAMAGE OR LOSS WHATSOEVER.
3) ANY IMPLIED WARRANTIES, INCLUDING WITHOUT LIMITATION THE IMPLIED WARRANTIES OF MERCHANTABILITY AND FITNESS FOR A PARTICULAR PURPOSE, SHALL BE LIMITED TO TWO YEARS, OTHERWISE THE REPAIR, REPLACEMENT OR REFUND AS PROVIDED UNDER THIS EXPRESS LIMITED WARRANTY IS THE EXCLUSIVE REMEDY OF THE CONSUMER, AND IS PROVIDED IN LIEU OF ALL OTHER WARRANTIES, EXPRESS OR IMPLIED.
4) ANY MODIFICATION, ALTERATION, ABUSE, UNAUTHORIZED SERVICE OR ORNAMENTAL DESIGN VOIDS THIS WARRANTY AND IS NOT COVERED BY THIS WARRANTY.

Some states do not allow limitations on how long an implied warranty lasts, so the above limitation may not apply to you. Some states do not allow the exclusion or limitation of incidental or consequential damages, so the above limitation or exclusion may not apply to you. This warranty gives you specific legal rights, and you may also have other rights which vary from state to state.